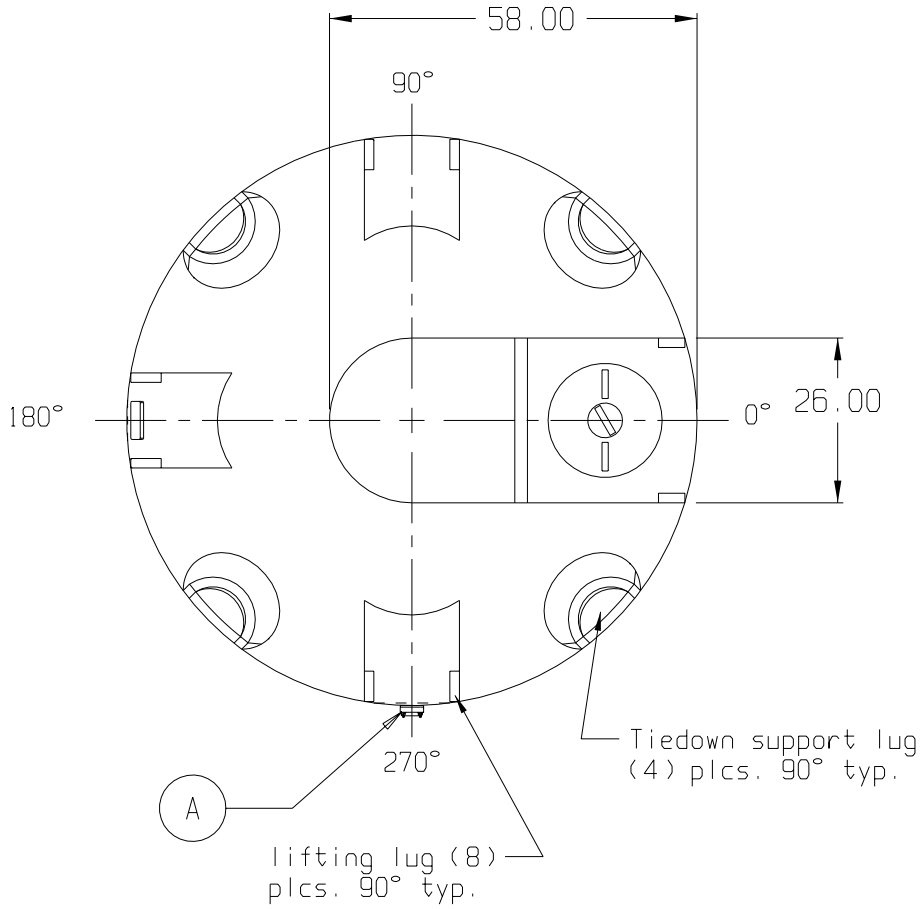

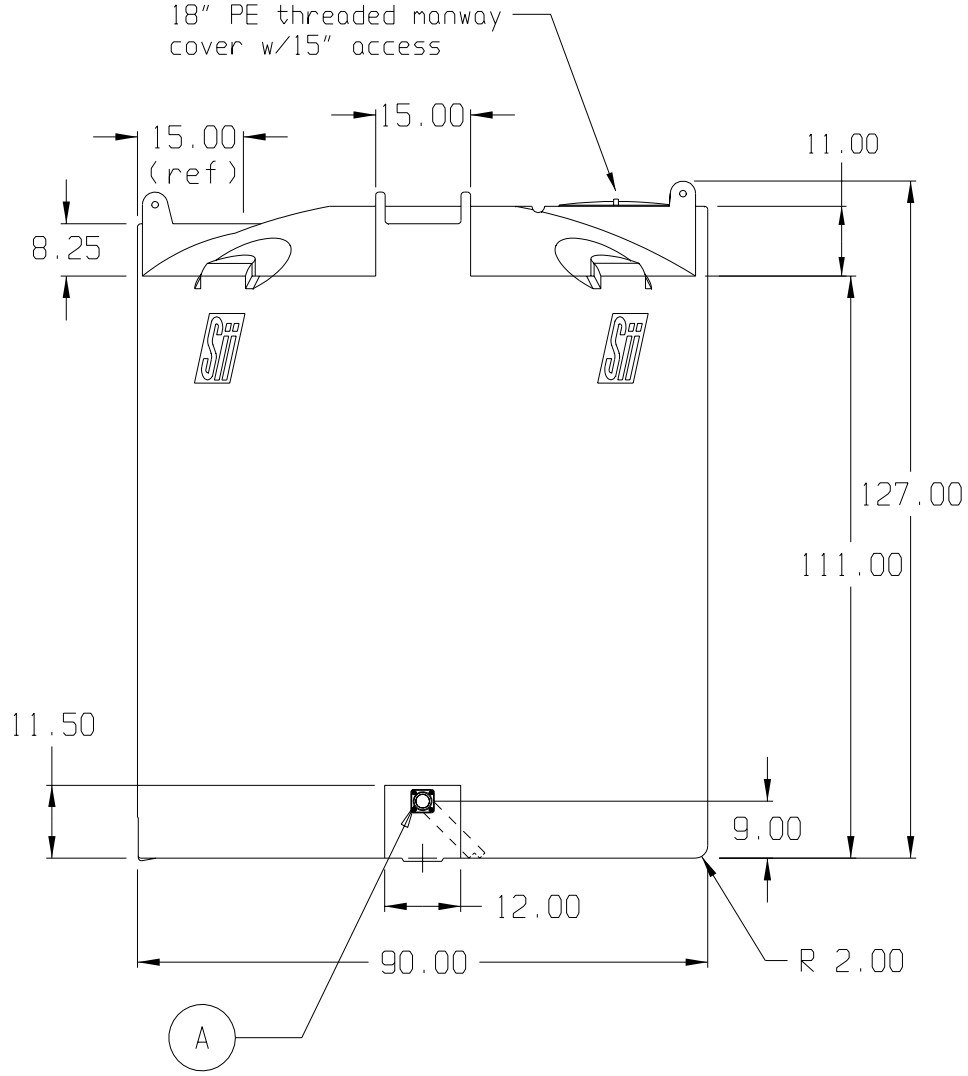

A. 2" PP BOLTED FLANGE FITTING W/EPDM GASKETS AND 2" PP SIPHON TUBE

SNYDER INDUSTRIES INC.

(all dimensions in inches)

PART # TANK: 513069

3,000 GAL. VERTICAL WATER STORAGE TANK

REF#: 0000

00/00/00