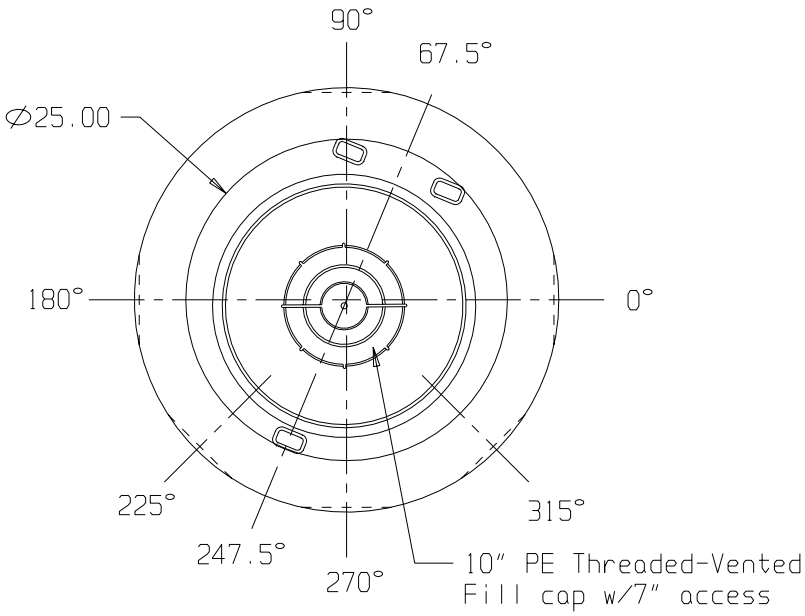

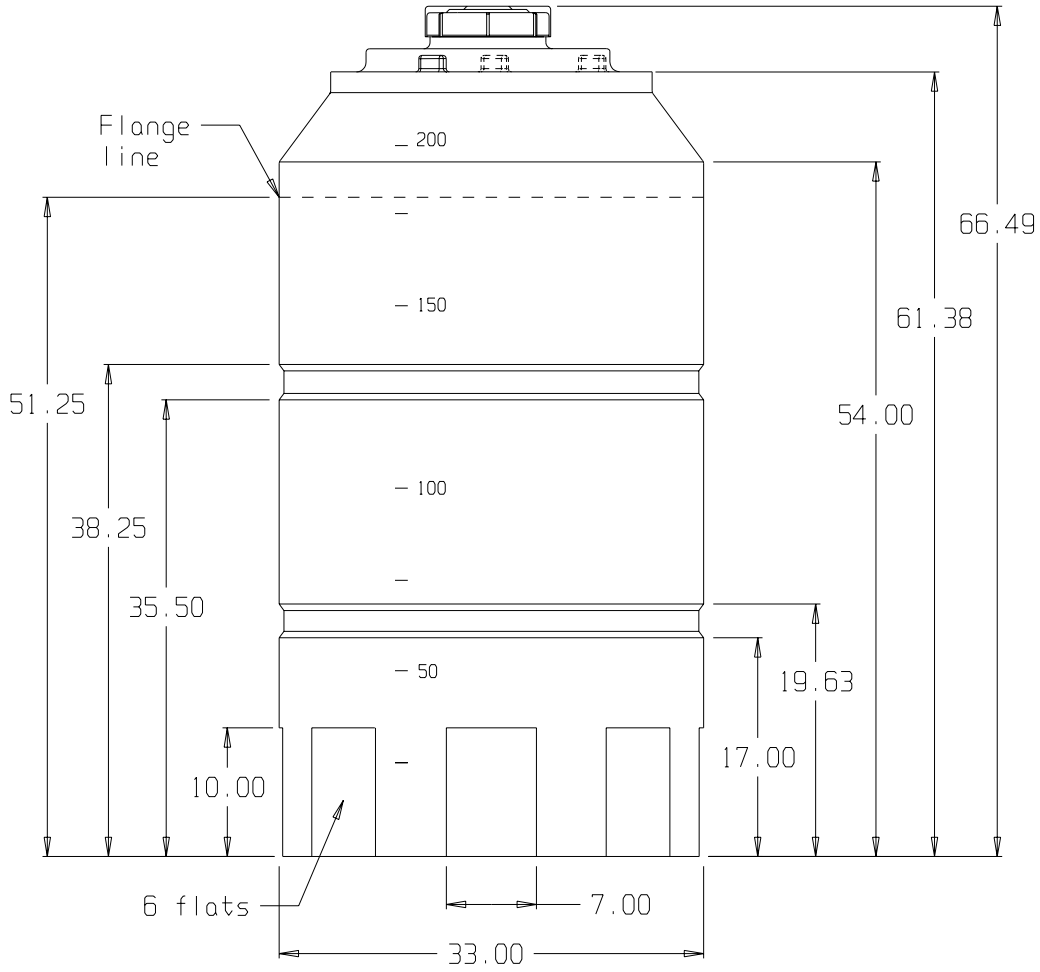

SNYDER INDUSTRIES INC.

(all dimensions in inches)

BASE FITTINGS TO BE LEFT INSTALLED AT TIME OF SHIPMENT PER Sii PROCEDURE

PART # TANK: 8020--MT

200 GALLON VERTICAL TANK

REF#: 0000

06/20/02