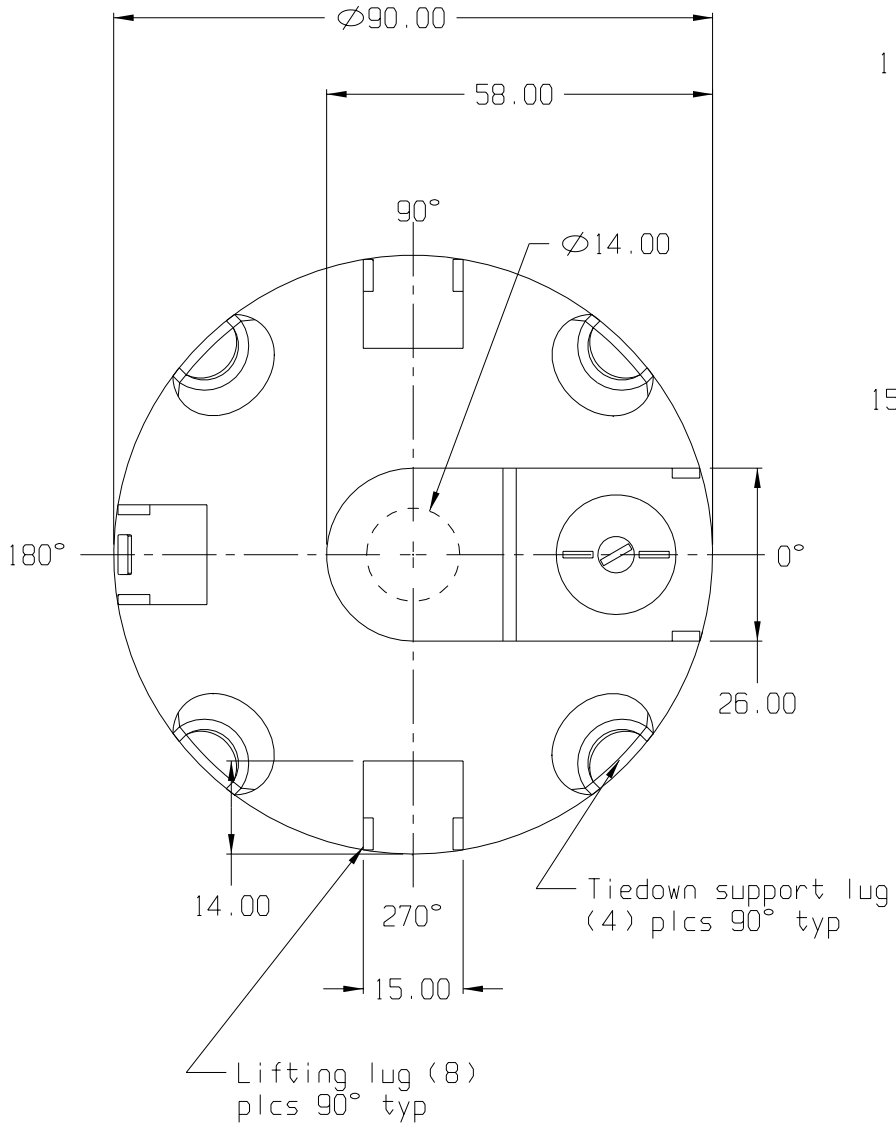

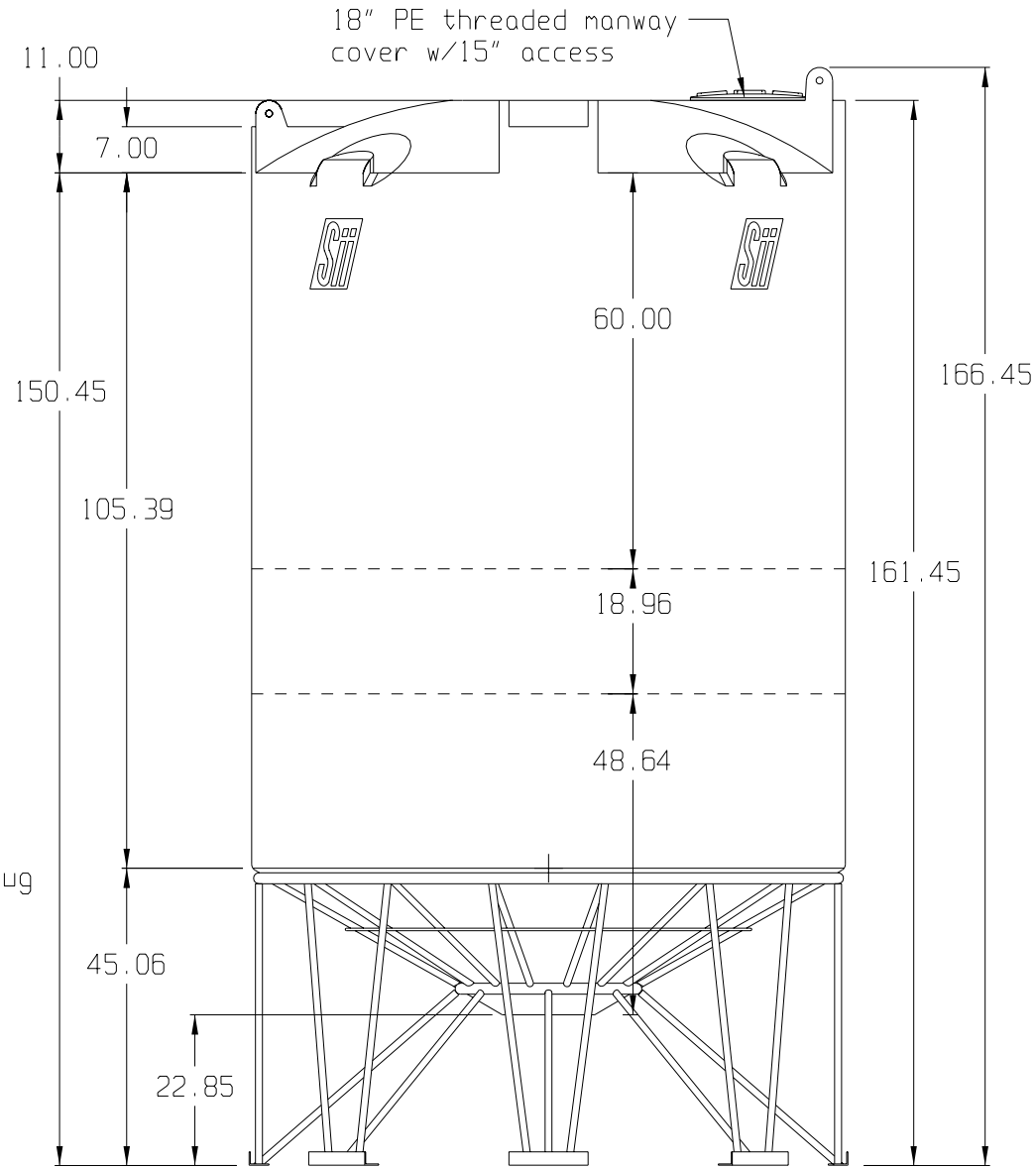

SNYDER INDUSTRIES INC.

(all dimensions in inches)

BASE FITTINGS TO BE LEFT INSTALLED AT TIME OF SHIPMENT PER Sii PROCEDURE

3,000 GALLON 30° CONE BOTTOM TANK

PART #	TANK:	5150--NO SUMP
	STAND:	79100
REF#:	0000	11/22/02