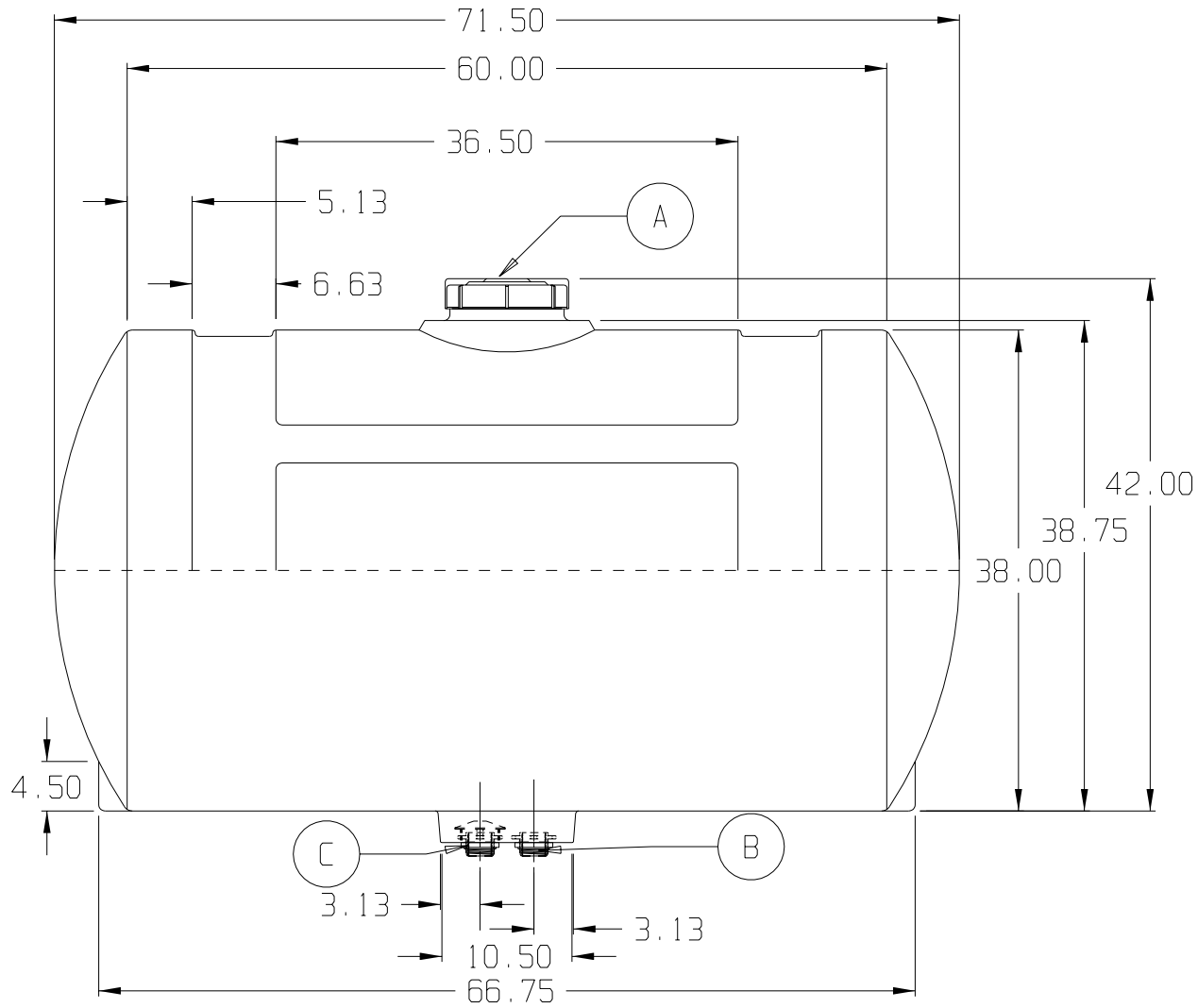

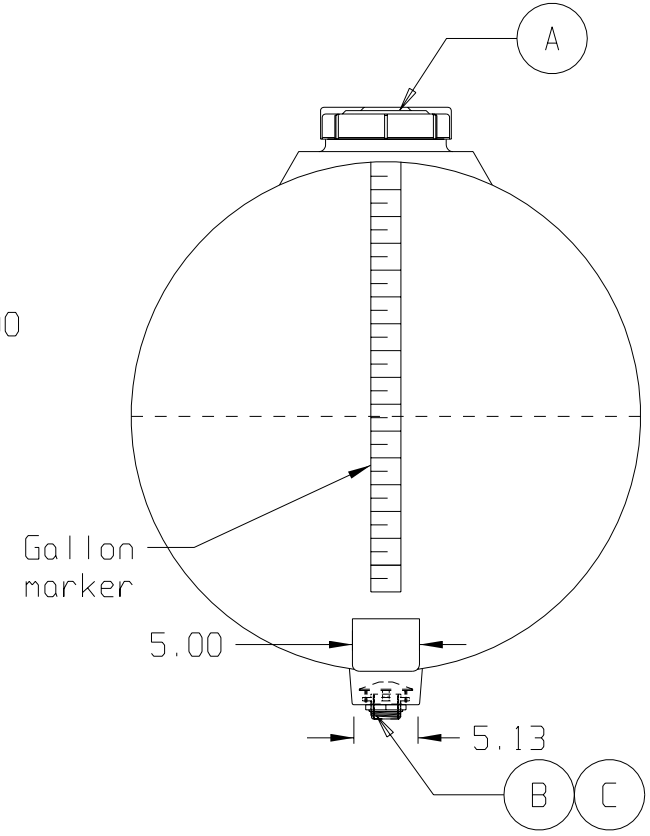

STANDARD OUTLET SPECIFICATION * C *

A. 10" PE THREADED FILL CAP W/7" ACCESS P/N 343080]
B. 1-1/4" PE SII STD. THREADED FTG W/EPDM GASKET [P/N 340003]
C. 1-1/4" PE SII STD. THREADED FTG W/EPDM GASKET & ANTI-VORTEX CAP [P/N 347007]

BASE FITTINGS TO BE LEFT INSTALLED AT TIME OF SHIPMENT PER SII PROCEDURE

(all dimensions in inches)

300 GALLON HORIZONTAL TANK

PART # TANK: 133--

REF#: 0000 01/10/03

SNYDER INDUSTRIES INC.